IAP-103 Wireless Access Point

The Aruba IAP-103 wireless access point supports the IEEE 802.11n standard for high-performance WLAN. This access point uses MIMO (Multiple-in, Multiple-out) technology and other high-throughput mode techniques to deliver high-performance, 802.11n 2.4 GHz or 5 GHz functionality while simultaneously supporting existing 802.11a/b/g wireless services. The IAP-103 access point works only in conjunction with a virtual controller.

The Aruba IAP-103 access point provides the following capabilities:

- Wireless transceiver
- Protocol-independent networking functionality
- IEEE 802.11a/b/g/n operation as a wireless access point
- IEEE 802.11a/b/g/n operation as a wireless air monitor
- Compatibility with IEEE 802.3af PoE

NOTE

The IAP-103 requires Aruba Instant 4.1 or later.

Package Contents

- IAP-103 access point
- 9/16" and 15/16" Ceiling Rail Adapters
- Aruba Instant Quick Start Guide
- Installation guide (this document)

NOTE

Inform your supplier if there are any incorrect, missing, or damaged parts. If possible, retain the carton, including the original packing materials. Use these materials to repack and return the unit to the supplier if needed.

IAP-103 Hardware Overview

Figure 1 *IAP-103 LEDs*

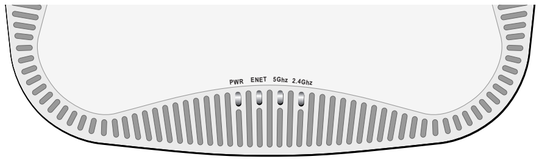

LEDs

The IAP-103 is equipped with four LEDs that indicate the status of the various components of the AP.

- PWR: Indicates whether or not the IAP-103 is powered-on
- ENET: Indicates the status of the IAP-103 Ethernet port
- 5 GHz: Indicates the status of the 802.11a/n radio
- 2.4 GHz: Indicates the status of the 802.11b/g/n radio

Table 1 *LED Meanings*

LED	Color/State	Meaning
PWR	Off	No power to AP, or initial power-up
	Red	Error condition
	Green - Flashing	AP booting
	Green - Steady	AP ready
ENET	Off	Ethernet link unavailable
	Yellow - Steady	10/100Mbps Ethernet link established
	Green - Steady	1000Mbps Ethernet link established
	Flashing	Ethernet link activity
5 GHz	Off	5 GHz radio disabled
	Yellow - Steady	5 Ghz radio enabled in non-HT WLAN mode
	Green - Steady	5 Ghz radio enabled in HT WLAN mode
	Flashing - Green	5 Ghz Air or Spectrum Monitor
2.4 GHz	Off	2.4 GHz radio disabled
	Yellow - Steady	2.4 Ghz radio enabled in non-HT WLAN mode
	Green - Steady	2.4 Ghz radio enabled in HT WLAN mode
	Flashing - Green	2.4 Ghz Air or Spectrum Monitor

Figure 2 *IAP-103 Rear*

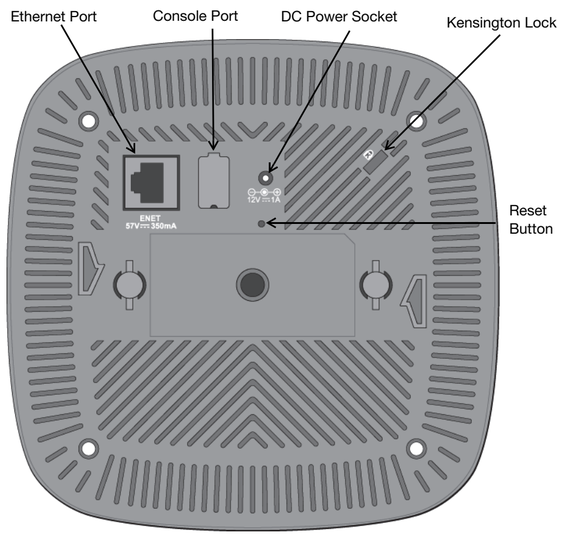

Console Port

The serial console port allows you to connect the AP to a serial terminal or a laptop for direct local management. This port located at the rear of the IAP-103 is a 4-pin connector covered by a dust cover. An optional serial adapter cable (AP-CBL-SER) is available for use with the IAP-103 and is sold separately.

WARNING

Hot-plug operation is not recommended for the console port.

Ethernet Port

IAP-103 is equipped with one 10/100/1000Base-T (RJ-45) auto-sensing, MDI/MDX wired-network connectivity port. This port supports IEEE 802.3af Power over Ethernet (PoE) compliance, accepting 48 VDC (nominal) as a standard defined Powered Device (PD) from a Power Sourcing Equipment (PSE) such as a PoE midspan injector, or network infrastructure that supports PoE.

The 10/100/1000 Mbps Ethernet port is on the back of the AP. The port has RJ-45 female connectors with the pin-outs shown in Figure 3.

Figure 3 *Gigabit Ethernet Port Pin-Out*

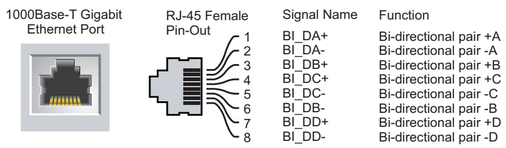

Signal Name	Function
BI_DA+	Bi-directional pair +A
BI_DA-	Bi-directional pair -A
BI_DB+	Bi-directional pair +B
BI_DC+	Bi-directional pair +C
BI_DC-	Bi-directional pair -C
BI_DB-	Bi-directional pair -B
BI_DD+	Bi-directional pair +D
BI_DD-	Bi-directional pair -D

DC Power Socket

If PoE is not available, an optional Aruba AP AC-DC adapter kit (sold separately) can be used to power the IAP-103.

Additionally, a locally-sourced AC-to-DC adapter (or any DC source) can be used to power this device, as long as it complies with all applicable local regulatory requirements and the DC interface meets the following specifications:

- 12 VDC (+/- 5%)/18W
- Center-positive 1.7/4.0 mm circular plug, 9.5 mm length

Reset Button

The reset button can be used to return the AP to factory default settings. To reset the AP:

1. Power off the AP.
2. Press and hold the reset button using a small, narrow object, such as a paperclip.
3. Power-on the AP without releasing the reset button. The power LED will flash within 5 seconds.
4. Release the reset button.

The power LED will flash again within 15 seconds indicating that the reset is completed. The AP will now continue to boot with the factory default settings.

Before You Begin

CAUTION

FCC Statement: Improper termination of access points installed in the United States (non-US model Regulatory Domain model/s) will be in violation of the FCC grant of equipment authorization. Any such willful or intentional violation may result in a requirement by the FCC for immediate termination of operation and may be subject to forfeiture (47 CFR 1.80).

CAUTION

EU Statement:
Lower power radio LAN product operating in 2.4 GHz and 5 GHz bands. Please refer to the *Aruba Instant User Guide* for details on restrictions.

Produit réseau local radio basse puissance operant dans la bande fréquence 2.4 GHz et 5 GHz. Merci de vous referrer au *Aruba Instant User Guide* pour les details des restrictions.

Low Power FunkLAN Produkt, das im 2.4 GHz und im 5 GHz Band arbeitet. Weitere Informationen bezlüglich Einschränkungen finden Sie im *Aruba Instant User Guide.*

Apparati Radio LAN a bassa Potenza, operanti a 2.4 GHz e 5 GHz. Fare riferimento alla *Aruba Instant User Guide* per avere informazioni detagliate sulle restrizioni.

AP Pre-Installation Checklist

Before installing your AP, ensure that you have the following:

- CAT5e or better UTP cable of required length
- One of the following power sources:
  - 802.3af-compliant Power over Ethernet (PoE) source. The POE source can be any midspan power source equipment (PSE) device
  - Aruba AP AC-DC adapter kit (sold separately)

Summary of the Setup Process

Successful setup of an IAP-103 consists of four tasks, which must be performed in this order:

1. Identify the specific installation location for each AP.
2. Install each AP.
3. Verify post-installation connectivity.
4. Configure the virtual controller. Refer to the *Aruba Instant Quick Start Guide.*

NOTE

Aruba Networks, Inc., in compliance with governmental requirements, has designed the IAP-103 access point so that only authorized network administrators can change the settings. For more information about AP configuration, refer to the *Aruba Instant Quick Start Guide and Aruba Instant User Guide*.

CAUTION

Access points are radio transmission devices and as such are subject to governmental regulation. Network administrators responsible for the configuration and operation of access points must comply with local broadcast regulations. Specifically, access points must use channel assignments appropriate to the location in which the access point will be used.

Identifying Specific Installation Locations

You can mount the IAP-103 access point on a wall or on the ceiling. Use the AP placement map generated by Aruba's Airwave VisualRF Plan software application to determine the proper installation location(s). Each location should be as close as possible to the center of the intended coverage area and should be free from obstructions or obvious sources of interference. These RF absorbers/reflectors/interference sources will impact RF propagation and should have been accounted for during the planning phase and adjusted for in VisualRF plan.

Identifying Known RF Absorbers/Reflectors/Interference Sources

Identifying known RF absorbers, reflectors, and interference sources while in the field during the installation phase is critical. Make sure that these sources are taken into consideration when you attach an AP to its fixed location. Examples of sources that degrade RF performance include:

- Cement and brick
- Objects that contain water
- Metal
- Microwave ovens
- Wireless phones and headsets

Installing the AP

NOTE

Service to all Aruba Networks products should be performed by trained service personnel only.

Using the Ceiling Rail Adapter

The IAP-103 ships with two ceiling rail adapters for 9/16" and 15/16" ceiling rails. Additional wall mount adapters and ceiling rail adapters for other rail styles are available as accessory kits.

CAUTION

Make sure the AP fits securely on the ceiling tile rail when hanging the device from the ceiling, because poor installation could cause it to fall onto people or equipment.

1. Pull the necessary cables through a prepared hole in the ceiling tile near where the AP will be placed.
2. Place the adapter against the back of the AP with the adapter at an angle of approximately 30 degrees to the tabs (see Figure 4).
3. Twist the adapter clockwise until it snaps into place in the tabs (see Figure 4).

Figure 4 *Attaching the Ceiling Rail Adapter*

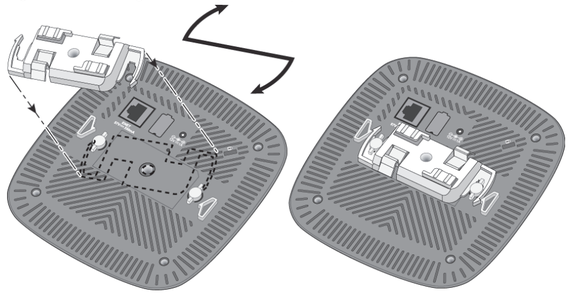

4. If necessary, connect the console cable to the console port on the back of the AP.
5. Hold the AP next to the ceiling tile rail with the ceiling tile rail mounting slots at approximately a 30-degree angle to the ceiling tile rail (see Figure 5). Make sure that any cable slack is above the ceiling tile.
6. Pushing toward the ceiling tile, rotate the AP clockwise until the device clicks into place on the ceiling tile rail.

Figure 5 *Mounting the AP*

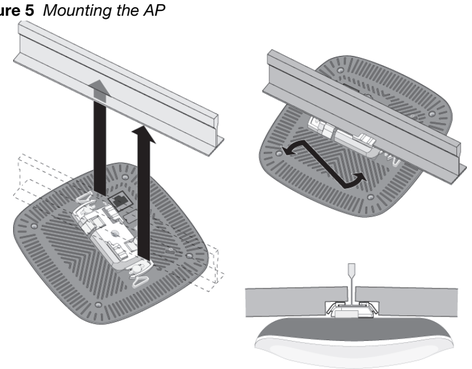

Connecting Required Cables

Install cables in accordance with all applicable local and national regulations and practices.

Verifying Post-Installation Connectivity

The integrated LEDs on the AP can be used to verify that the AP is receiving power and initializing successfully (see Table 1). Refer to the *Aruba Instant Quick Start Guide* for further details on verifying post-installation network connectivity.

Product Specifications

Electrical

- Ethernet:
  - 1x 10/100/1000Base-T auto-sensing Ethernet RJ-45 Interface
  - MDI/MDX
  - IEEE 802.3 (10Base-T), IEEE 802.3u (100Base-T). IEEE 802.3ab (1000Base-T)
  - Power over Ethernet (802.3af compliant), 48V DC (nominal) and 56V DC (maximum)/350mA (see Figure 3 for pin configuration)
- Power:
  - 12 VDC power interface, supports powering through an AC-to-DC power adapter
  - POE support on Ethernet ports: 802.3af-compliant POE sourcing devices

NOTE

If a power adapter other than the one provided by Aruba Networks is used in the US or Canada, it should be cULus (NRTL) Listed, with an output rated 12 VDC, minimum 1.25A, marked "LPS" or "Class 2," and suitable for plugging into a standard power receptacle in the US and Canada.

For additional specifications on this product, please refer to the data sheet. The data sheet can be found at www.arubanetworks.com.

Proper Disposal of Aruba Equipment

For the most current information about Global Environmental Compliance and Aruba products, see our website at www.arubanetworks.com.

Waste of Electrical and Electronic Equipment

Aruba products at end of life are subject to separate collection and treatment in the EU Member States, Norway, and Switzerland and therefore are marked with the symbol shown at the left (crossed-out wheelie bin). The treatment applied at end of life of these products in these countries shall comply with the applicable national laws of countries implementing Directive 2002/96EC on Waste of Electrical and Electronic Equipment (WEEE).

European Union RoHS

Aruba products also comply with the EU Restriction of Hazardous Substances Directive 2011/65/EC (RoHS). EU RoHS restricts the use of specific hazardous materials in the manufacture of electrical and electronic equipment. Specifically, restricted materials under the RoHS Directive are Lead (including Solder used in printed circuit assemblies), Cadmium, Mercury, Hexavalent Chromium, and Bromine. Some Aruba products are subject to the exemptions listed in RoHS Directive Annex 7 (Lead in solder used in printed circuit assemblies). Products and packaging will be marked with the "RoHS" label shown at the left indicating conformance to this Directive.

China RoHS

Aruba products also comply with China environmental declaration requirements and are labeled with the "EFUP 25" label shown at the left.

有毒有害物质声明
Hazardous Materials Declaration

部件名称 (Parts)	有毒有害物质或元素 (Hazardous Substance)					
	铅 (Pb)	汞 (Hg)	镉 (Cd)	六价铬 (Cr^{6+})	多溴联苯 (PBB)	多溴二苯醚 (PBDE)
电路板 (PCA Boards)	×	○	○	○	○	○
机械组件 (Mechanical Sub-Assemblies)	×	○	○	○	○	○

○ 表示该有毒有害物质在该部件所有均质材料中的含量均在 SJ/T11363-2006 标准规定的限量要求以下。
Indicates that the concentration of the hazardous substance in all homogeneous materials in the parts is below the relevant threshold of the SJ/T11363-2006 standard.

× 表示该有毒有害物质至少在该部件的某一均质材料中的含量超出SJ/T11363-2006标准规定的限量要求。
Indicates that the concentration of the hazardous substance of at least one of all homogeneous materials in the parts is above the relevant threshold of the SJ/T11363-2006 standard.

对销售之日的所售产品，本表显示，供应链的电子信息产品可能包含这些物质。
This table shows where these substances may be found in the supply chain of electronic information products, as of the date of sale of the enclosed product.

此标志为针对所涉及产品的环保使用期标志。某些零部件会有一个不同的环保使用期（例如，电池单元模块）贴在其产品上。
此环保使用期限只适用于产品是在产品手册中所规定的条件下工作。
The Environments- Friendly Use Period (EFUP) for all enclosed products and their parts are per the symbol shown here. The Environments- Friendly Use Period is valid only when the product is operated under the conditions defined in the product manual.

Safety and Regulatory Compliance

Aruba Networks provides a multi-language document that contains country-specific restrictions and additional safety and regulatory information for all Aruba access points. This document can be viewed or downloaded from the following location: www.arubanetworks.com/safety_addendum

Regulatory Model Names

The following regulatory model names apply to the IAP-103:

- IAP-103: APIN0103

FCC

This device is electronically labeled. To view the FCC ID:

1. Log into the controller WebUI.
2. Navigate to **Maintenance > Controller > About**..

CAUTION

RF Radiation Exposure Statement: This equipment complies with FCC RF radiation exposure limits. This equipment should be installed and operated with a minimum distance of 7.9 inches (20 cm) between the radiator and your body for 2.4 GHz and 5 GHz operations. This transmitter must not be co-located or operating in conjunction with any other antenna or transmitter. When operated in the 5.15 to 5.25 GHz frequency range, this device is restricted to indoor use to reduce the potential for harmful interference with co-channel Mobile Satellite Systems.

FCC Class B Part 15

This device complies with Part 15 of the Federal Communications Commission (FCC) Rules. Operation is subject to the following two conditions:

1. This device may not cause harmful interference.
2. This device must accept any interference received, including interference that may cause undesired operation.

CAUTION

Changes or modifications to this unit not expressly approved by the party responsible for compliance could void the user's authority to operate this equipment.

This equipment has been tested and found to comply with the limits for a Class B digital device, pursuant to Part 15 of the FCC Rules. This equipment generates, uses and can radiate radio frequency energy and, if not installed and used in accordance with the manufacturer's instructions, may cause interference harmful to radio communications.

If this equipment does cause interference, which can be determined by turning the equipment off and on, the user is encouraged to try to correct the interference by one or more of the following measures:

- Reorient or relocate the receiving antenna.
- Increase the separation between the equipment and receiver.
- Connect the equipment to an outlet on a circuit different from that to which the receiver is connected.
- Consult the dealer or an experienced radio or TV technician for help.

Complies with the Class B limits for radio noise emissions as set out in the interference-causing equipment standard entitled "Digital Apparatus," ICES-003 of Industry Canada.

Cet apareil numerique de la classe B respecte toutes les exigencies du Reglement sur le materiel brouilleur du Canada.

Users are advised that high power Radars are allocated as primary users of the bands 5250-5350 MHz and 5650-5850 MHz and these Radars could cause interference and/or damage to Licensed Exempt WLAN devices.

EU Regulatory Conformance

This product is CE marked according to the provisions of the R & TTE Directive (1999/5/EC) - CE(!). Aruba Networks Inc., hereby declares that the APIN0103 device model is in compliance with the essential requirements and other relevant provisions of Directive 1999/5/EC -CE(!)

The Declaration of Conformity made under Directive 1999/5/EC is available for viewing at the following location: http://support.arubanetworks.com

Users are advised that high power Radars are allocated as primary users of the bands 5250-5350 MHz and 5650-5850 MHz and these Radars could cause interference and/or damage to Licensed Exempt WLAN devices.

Canadian Statement

Under Industry Canada regulations, this radio transmitter may only operate using an antenna of a type and maximum (or lesser) gain approved for the transmitter by Industry Canada. To reduce potential radio interference to other users, the antenna type and its gain should be so chosen that the equivalent isotropically radiated power (e.i.r.p.) is not more than that necessary for successful communication.

This device complies with Industry Canada licence-exempt RSS standard(s).

Operation is subject to the following two conditions: (1) this device may not cause interference, and (2) this device must accept any interference, including interference that may cause undesired operation of the device.

IAP-103 Wireless Access Point

Installation Guide

Contacting Aruba Networks

Web Support	
Main Site	http://www.arubanetworks.com
Support Site	https://support.arubanetworks.com
Airheads Social Forums and Knowledge Base	community.arubanetworks.com
North American Telephone	1-800-943-4526 (Toll Free) 1-408-754-1200
International Telephones	arubanetworks.com/support-services/aruba-support-program/contact-support/
Software Licensing Site	licensing.arubanetworks.com/login.php
Wireless Security Incident Response Team (WSIRT)	arubanetworks.com/support/wsirt.php
Support Email Addresses	
Americas and APAC	support@arubanetworks.com
EMEA	emea.support@arubanetworks.com
Americas and APAC Support Email	support@arubanetworks.com
WSIRT Email Please email details of any security problem found in an Aruba product.	wsirt@arubanetworks.com

Open Source Code

Certain Aruba products include Open Source software code developed by third parties, including software code subject to the GNU General Public License ("GPL"), GNU Lesser General Public License ("LGPL"), or other Open Source Licenses. The Open Source code used can be found at this site:

http://www.arubanetworks.com/open_source

Legal Notice

The use of Aruba Networks, Inc. switching platforms and software, by all individuals or corporations, to terminate other vendors' VPN client devices constitutes complete acceptance of liability by that individual or corporation for this action and indemnifies, in full, Aruba Networks, Inc. from any and all legal actions that might be taken against it with respect to infringement of copyright on behalf of those vendors.

Warranty

This hardware product is protected by an Aruba warranty. For details, see Aruba Networks standard warranty terms and conditions.

www.arubanetworks.com
1344 Crossman Avenue
Sunnyvale, California 94089
Phone: 408.227.4500
Fax 408.227.4550

IAP-103 Wireless Access Point | Installation Guide
Part Number 0511606-02 | June 2014
0511606-02